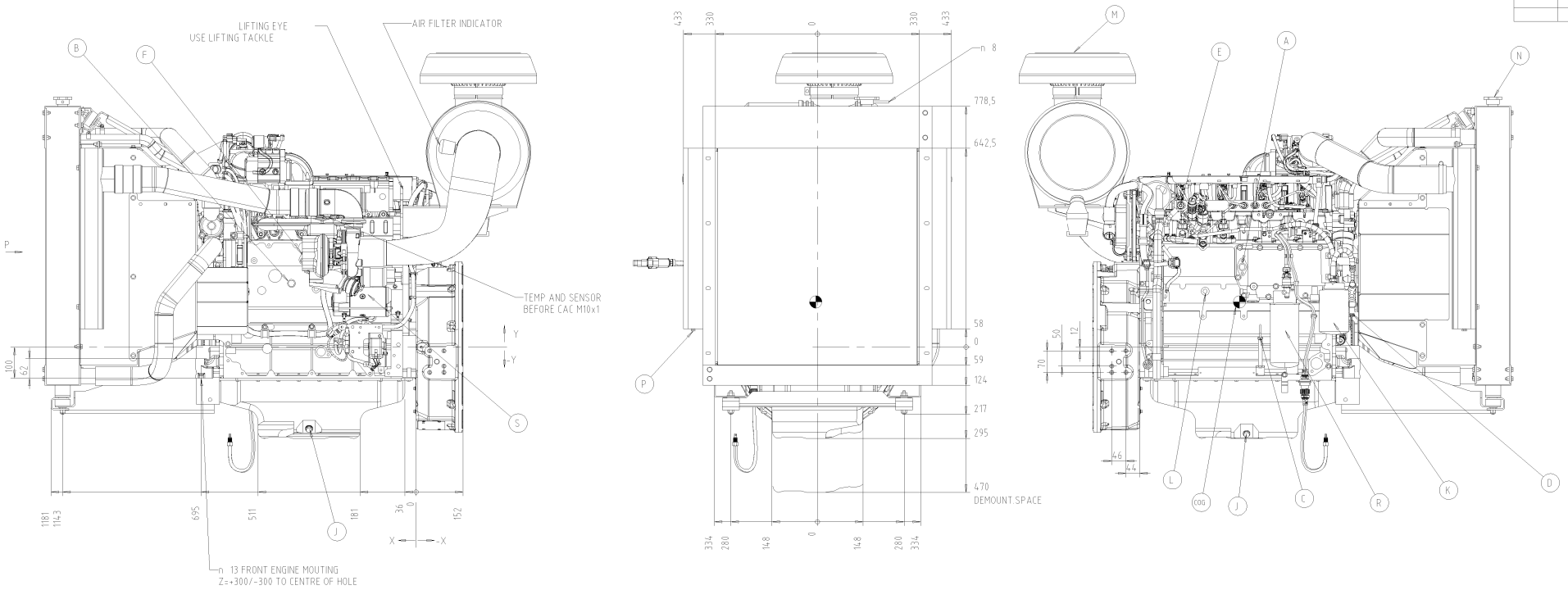

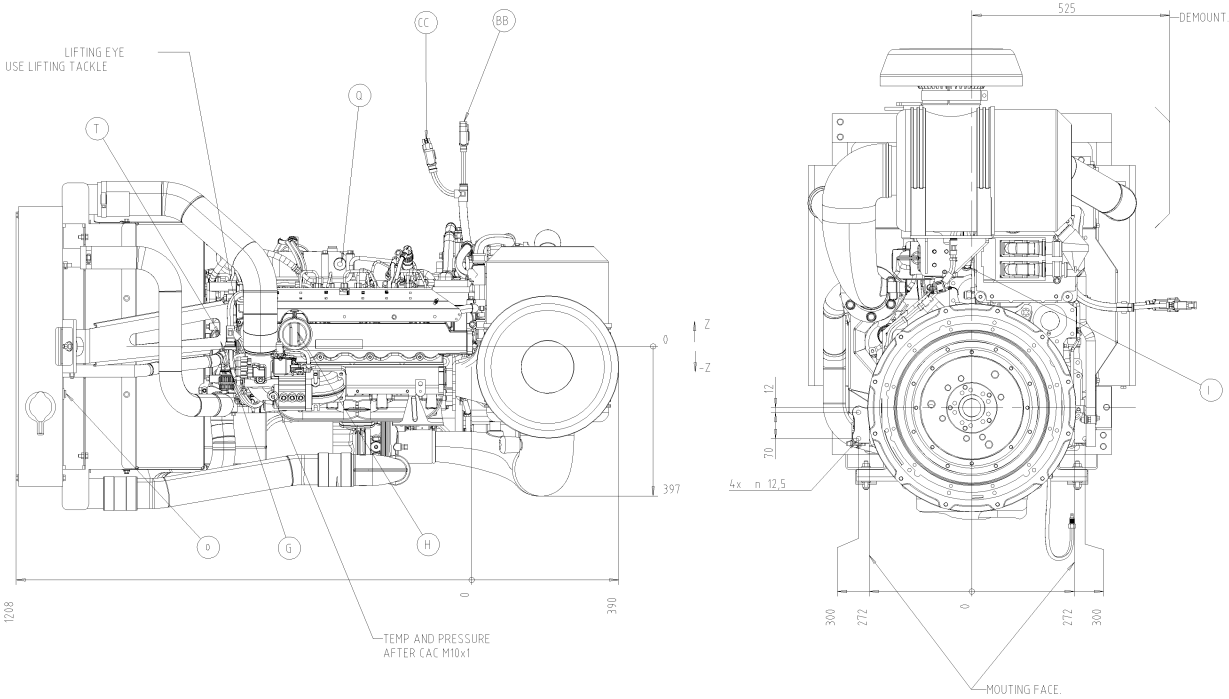

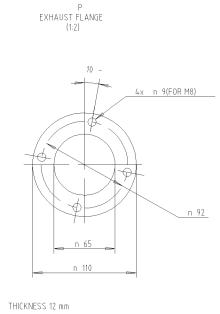

SCALE: 1:5

POS	DESCRIPTION	X	Y	Z	NOTE
A	ENGINE HEATER	332	259	252	OPTION
B	COOLANT DRAIN	403	206	-90	M14x1.5
C	OIL DIPSTICK	390	28	187	
D	FUEL INLET	687	104	175	FOR HOSE INTERNAL n 12
E	FUEL RETURN AND VENT SCREW	133	458	204	FOR HOSE INTERNAL n 10
F	EXHAUST OUTLET TURBO	368	305	-266	INNER n 56
G	AIR VENTING FOR COOLANT FILLING	643	426	-24	THERMOSTAT HOUSING
H	OIL FILLER CAP	470	536	32	
I	COOLANT TEMP SWITCH/SENDER	9	380	-14	N14x1.5
J	OIL DRAIN PLUG	346	266	136	M18x1.5
J	OIL DRAIN PLUG	346	-281	134	M18x1.5
K	FUEL FILTER	629	41	241	
L	OIL PRESSURE	212	180	55	M14x1.5 EXTERNAL
M	AIR FILTER TOP	-202	953	55	
N	WATER FILLING+PRESSURE CAP	1143	808	-160	
O	COOLANT LEVEL SWITCH	1076	704	-126	
P	CHARGE AIR COOLER DRAIN	1050	52	402	M8x1
Q	TO ENGINE HEATER	349	335	218	EXTERNAL M26x1.5
R	OIL FILTER	469	-71	226	n 97. DEMOUNT SPACE Y=-91
S	STARTER MOTOR	275	147	-149	
T	FROM ENGINE HEATER	646	445	14	M26x1.5 EXTERNAL
BB	VODIA, 6-POLE CONNECTOR				
CC	CAN, 8-POLE CONNECTOR				
COG	CENTRE OF GRAVITY	323	146	5,5	

The copying, distribution and utilization of this document as well as the communication of its contents to others without express authorization is prohibited. Offenders will be held liable for payment of damages. All rights reserved in the event of the grant of a patent, utility model or ornamental design registration.

VOLVO PENTA

SYMBOLS, DESIGNATIONS AND GENERAL DRAWING METHODS STD 101-0005

Document title
ENGINE DIMENSIONS
TAD 550/551 GE

Document type

Name/Description/prefix

Document No: 21545429 | Issue Index: 03 | Sheet No: 1(1)